OLYMPUS Twin Pack - 6x4 Wide - Smooth Body RCV

Elite 2 - 6x4 Wide Track - Euro EEV

SPECIFICATIONS

35/65 split shown (50/50 split also available)

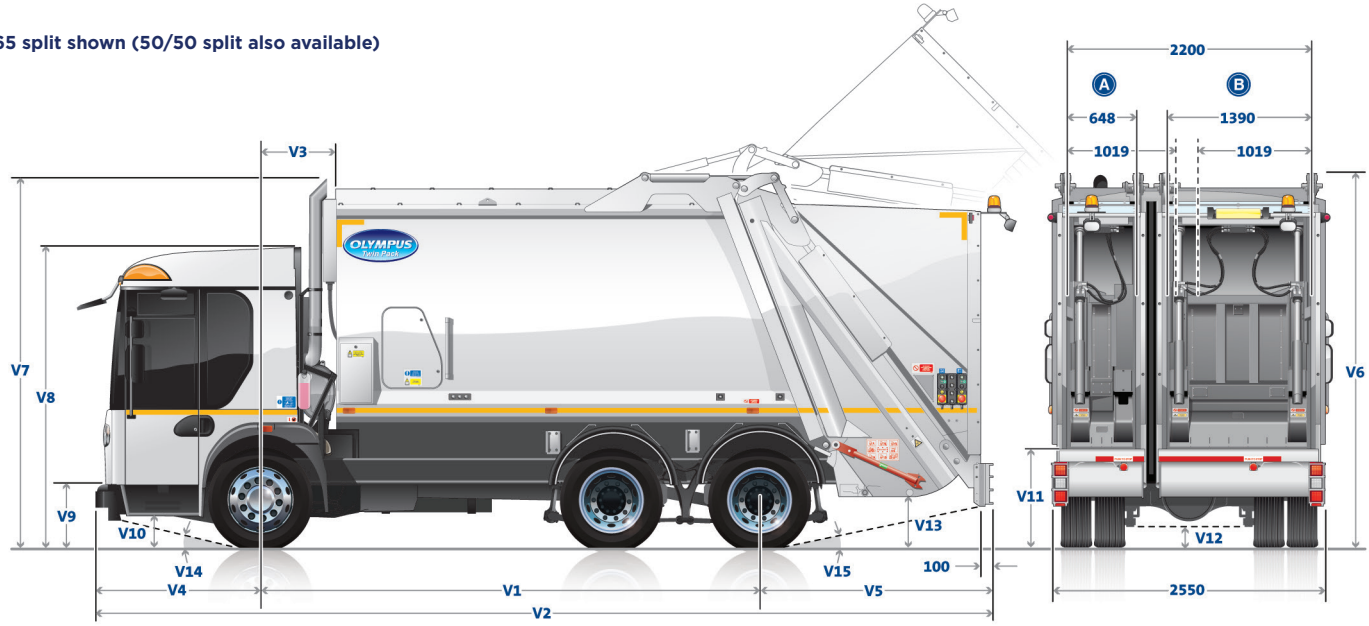

Vehicle model		**OLTP-22 6x4**
Compaction body type - effective volume(s)		Olympus Twin Pack-22 (21.6 m3)
Elite chassis type		6x4 Wide Track
GVW (Gross Vehicle Weight)		26000
Front axle plated weight		8000
Rear axle/bogie plated weight		1900
Air suspension		Front: 'Air-Assist' optional, Rear: standard
Recycling box type		-
Recycling box type (capacity m^3)		-
V1	Overall wheelbase	**5300**
Turning circle - overall (metres)		19.1****
Vehicle unladen weight***		16620
V2	Overall length	9220
	Overall length - tailgate raised	10275
V3	Front axle to front of compaction body	650
V4	Front overhang	1665
	Front overhang - cab tilted	3465
V5	Rear overhang	2060
	Rear overhang - tailgate raised	2940
V6	Overall height	3690
	Overall height - tailgate raised	5190
V7	Height at exhaust tip - nominal	3750
V8	Cab roof height	3040
	Cab roof height - cab tilted	3600
V9	Cab floor height	805
V10	First cab step height from ground	435
V11	Rave rail height	1070
V12	Ground clearance at lowest part of vehicle	250
V13	Ground clearance - tailgate	435
V14	Approach angle	15.5°
V15	Departure angle	15°

(*) Optional front axle plated weight of 7100 kg with 295/80R22.5 tyres.

(***) Typical rear mounted lifting device equipment will add up to 1200 kg.

(****) Turning circle shown is for worse case, fitment of optional tyres may reduce turning circle.

NOTE: Unless otherwise stated, all dimensions are nominal, in mm and represent an unladen vehicle without a lifting device and fitted with standard tyres; tyre deflection is not included. On vehicles equipped with optional air suspension, heights may differ. All specifications are subject to manufacturers tolerances. An allowance of +/- 2% should be made for all weights. All weights are in kgs and include oil and water, and on diesel fuelled vehicles, AdBlue and 50 litres of fuel. Additional equipment may alter dimensions and weights quoted.

DENNIS EAGLE

RosRoca

June 3/2013
DV-E64W-OTX-GBUK-1302

OLYMPUS Twin Pack - 6x4 Wide - Smooth Body RCV

Elite 2 - 6x4 Wide Track - Euro EEV

SPECIFICATIONS

Chassis

- Elite 2 6x4 Wide Track.
- Cab - Low floor with one step entry, Cromweld stainless steel construction, standard seating for driver + 3 crew, optional driver + 1 or driver + 4 seating.
- Engine - Volvo (Euro 5 & EEV) D7F 300 bhp, 6 cylinder, 7.142 litre in-line diesel.
- Braking system - full air - twin circuit, ABS, 6 wheel parking brake.
- Gearbox - Allison MD 3000, 6 speed automatic.
- For detailed specification and options, see relevant Elite 2 Datasheet.

Body

- Constructed from high tensile steel one piece rolled side sheets and braced by front and rear hoops, with pressed integral channels and flat floor.
- Sides in 4 mm S275 EN10025, Roof in S355 EN10025.
- Floor in three sections across width: 5 mm S355 EN10025.
- Rear hoop: 5-6 mm S355 EN10025.
- Barrier rails: 8 mm DOMEX 700 (700 N/mm^2).
- Rear cross-member: 6 mm DOMEX 650 (650 N/mm^2).
- The body is divided longitudinally by a reinforced central partition to give two totally separate compartments with the following capacities (m^3)

  50/50 Width body: Ⓐ = 10.8, Ⓑ = 10.8

  35/65 Width body: Ⓐ = 7.5, Ⓑ = 14.1.

Tailgate

- Two totally independent tailgates.
- Capacities (m^3):

  50/50 Width tailgate: Ⓐ = 0.93, Ⓑ = 0.93

  35/65 Width tailgate: Ⓐ = 0.62, Ⓑ = 1.24.
- Low rave rail height for manual loading and versatile lifting device mounting with bolt-on rave rail adaptor for lifting devices.
- Substantial pressed side plates form integrated channels to guide the compaction mechanism.
- Hydraulic packer plate cylinders are positioned to eliminate damage from waste.
- Reduced overhang for improved weight distribution and manoeuvrability.
- Integral rear frame for lifting device mounting.
- Floor: 8 mm HARDOX 400 (400 HB- 1000 N/mm^2).
- Sides: 7 mm HARDOX 400 (400 HB- 1000 N/mm^2).
- Rave Rail: 4 mm HARDOX 400 (400 HB- 1000 N/mm^2).
- Retainer Plate: 4 mm WELDOX 700 (700 N/mm^2).

Compaction Mechanism

- Totally independent two-plate fabricated carriage plate and packer plate design.
- Manufactured using high tensile abrasion resistant steel.
- Slides within tailgate channels on low friction self lubricating bearings.
- Heavy duty carriage and packer cylinders.
- The remaining structural elements are constructed in steel S355 EN10025 (355 N/mm^2).
- Base sheet & tube: 4 mm HARDOX 400 (1000 N/mm^2).
- Packer plate base: 6 mm HARDOX 400 (1000 N/mm^2).
- Nominal 18 second cycle time.

Refuse Ejection Plate

- Separate ejection plates.
- Ejection plate face is manufactured from high tensile abrasion resistant steel, forming a smooth and unobstructed discharge surface.
- Pressure regulation of the ejection plate from cab display.
- Self lubricating bearings guide the ejection plate along rails within the body.
- Multi-staged double acting hydraulic cylinder enables efficient ejection and retraction.

Electrical System

- Fully integrated CANBus system logic (CANopen).
- Simple display unit in cab for body controls and diagnostics.
- Fully water-proofed side mounted junction box contained within a locker allowing easy access for diagnostics and maintenance via laptop.
- Number and colour coded wiring for easy identification, maintenance and fault finding.
- Weatherproof switch, plug and socket connectors.

Hydraulic System

- Quiet, PTO mounted variable displacement pump with 130 cc/rev maximum flow supplying both compaction mechanism circuits.
- Lifting device circuits supplied by separate close coupled pump.
- Body mounted 200 litre tank with remote pressure fill.
- Full flow 10 micron return line filter controls contaminant levels.
- Engine speed is maintained by electronic throttle control system when hydraulic power consumption increases.
- Independent tailgate compaction mechanism control valves.
- Heavy duty inverted packer plate cylinders fitted with maintenance free spherical bearings.
- Heavy duty inverted compaction cylinders mounted outside the compaction mechanism, clear of the loading area.
- Retention barriers with adjustable pressure.

Safety

- CE Approved. Safe by design.
- Circuit designed to enhance Health & Safety features, and installation of lifting devices.
- Prepared for EN 1501-1:2011 & EN 1501-5:2011.
- Two-plate design, automatic body/tailgate locks and clean discharge remove the need to approach moving parts.
- Interlocks prevent the mechanism from working unless the tailgates are fully lowered.
- Automatic gearbox interlocks enhance safe operations.
- Tailgate lift rams are fitted with integral pilot operated load holding valves so that even if a hose fails, or is removed, the tailgate cannot descend unless positively powered downwards.
- Indicator icons show the driver when the mechanism is in operation, and when the tailgates are out of their locks.
- In cab discharge controls as standard, with external tailgate lower controls for optimised safety.
- Interlocked access door for safe maintenance operations.

Options

- A range of compatible lifting devices and DIN frames are available.
- Ladder to access the side door of the body.
- Leachate tank between body and tailgate.
- Brush & shovel with mountings.
- Hand wash unit.
- Rubber packer plate flap.

For more details of specifications and options please consult a Dennis Eagle Sales representative.

Dennis Eagle Ltd. (the company) reserves the right to change the specification, design, material, procedures and dimensions of the vehicles described herein without prior notice at any time in the future, in accordance with the company's constant product improvement policy.

www.dennis-eagle.com
e: sales@dennis-eagle.co.uk
t: +44 (0) 1926-458500
Dennis Eagle Ltd. Heathcote Way, Heathcote Industrial Estate, Warwick CV34 6TE. UK

DENNIS EAGLE
RosRoca